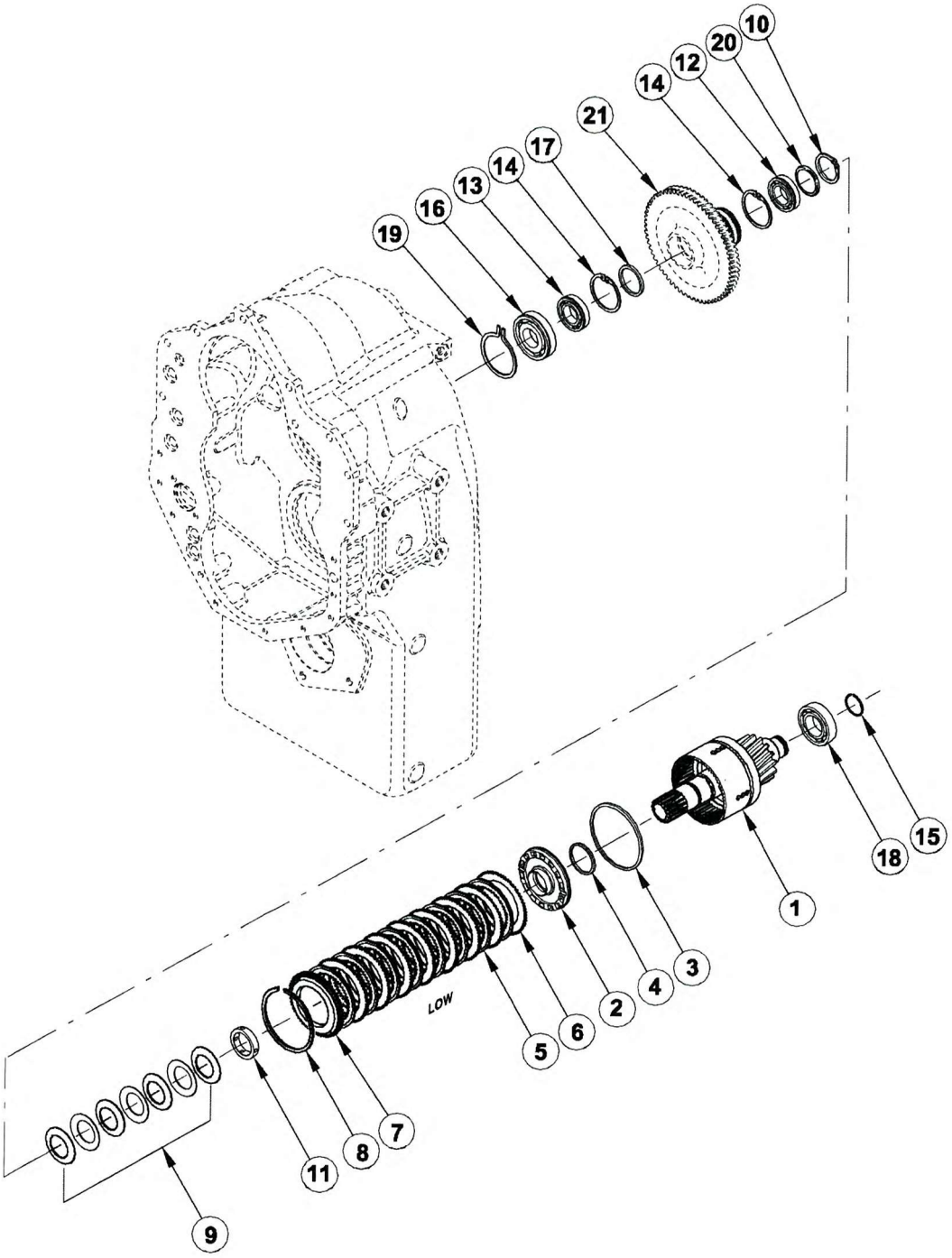


12104

(SHEET 1 OF 1)